PEERLESS®

PA847-24▲

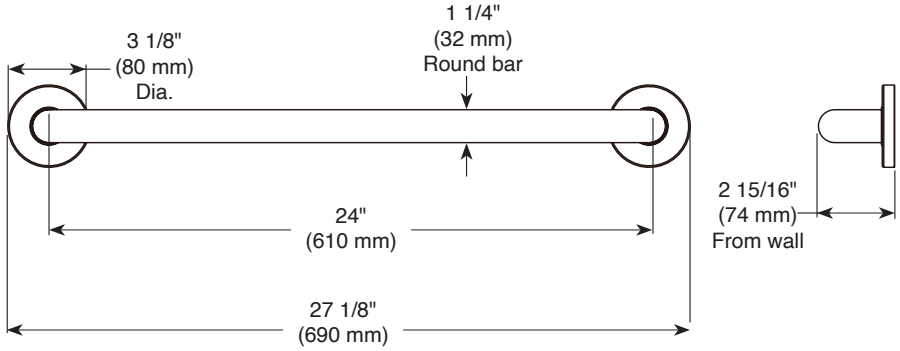

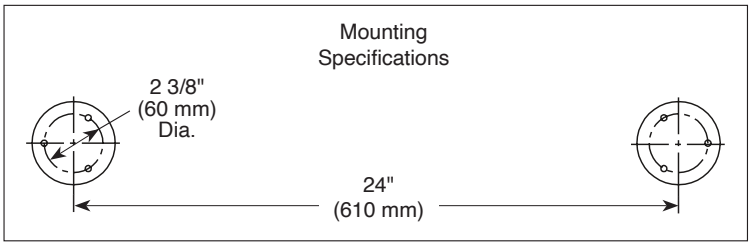

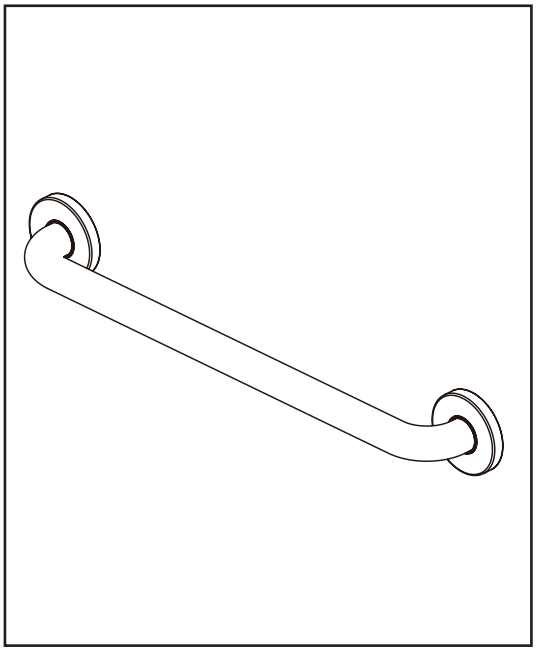

ACCESSORIES

- Precept® Bath Collection
- 24" Decorative Grab Bar

STANDARD SPECIFICATIONS:

- Wood blocking is preferable behind all wall surfaces. If wood blocking is not available, the supplied fasteners are recommended.
- Mounting hardware included with product.
- Decorative ADA compliant grab bar when installed per accessibility guidelines of the act.

WARRANTY

- Parts and Finish – Lifetime limited warranty; or for commercial purchasers, 10 years for multi-family residential (apartments and condominiums) and 5 years for all other commercial uses, in each case from the date that the product is received by the original purchaser or their authorized representative (installation contractor, etc.).
- Please go to www.peerlessfaucet.com for the complete details of our limited warranty.

COMPLIES WITH:

ICC/ANSI A117.1

▲ Designate proper finish suffix