05 Series

Tub & Shower Valve

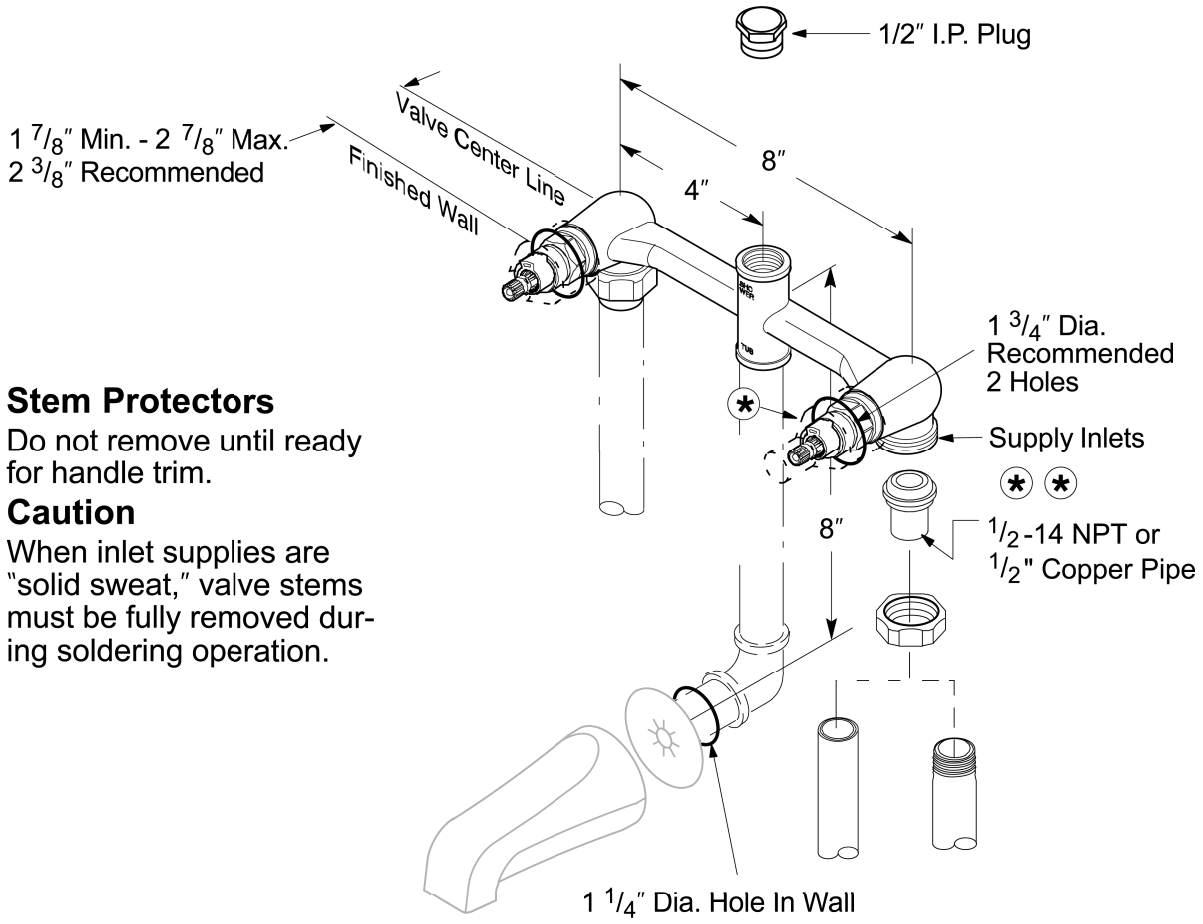

⊛ Stem Protectors

Do not remove until ready for handle trim.

⊛ ⊛ Caution

When inlet supplies are "solid sweat," valve stems must be fully removed during soldering operation.

1-800-PFAUCET www.pricepfister.com
19701 DaVinci, Lake Forest, CA 92610
01/8/03

Price Pfister®
Pf Pfreshest Ideas in Pfaucets.