Middleton®

Top-mount Kitchen Sink

14707-3

Features

- Top-mount
- Three faucet holes
- 7"-deep double bowls
- 3-5/8" drain opening
- Stainless steel with durable satin finish
- SilentShield technology
- 21-gauge stainless steel
- Lifetime limited warranty

Recommended Accessories

11861 Sink Rack
7400 Sink Strainer
K-6039 Sink Rack

Components

Product includes:
1150001 Installation Clips

Codes/Standards

ASME A112.19.3/CSA B45.4

STERLING® Warranty - Stainless Steel Sinks

See website for detailed warranty information.

STERLING
A KOHLER COMPANY

Middleton®

Top-mount Kitchen Sink

14707-3

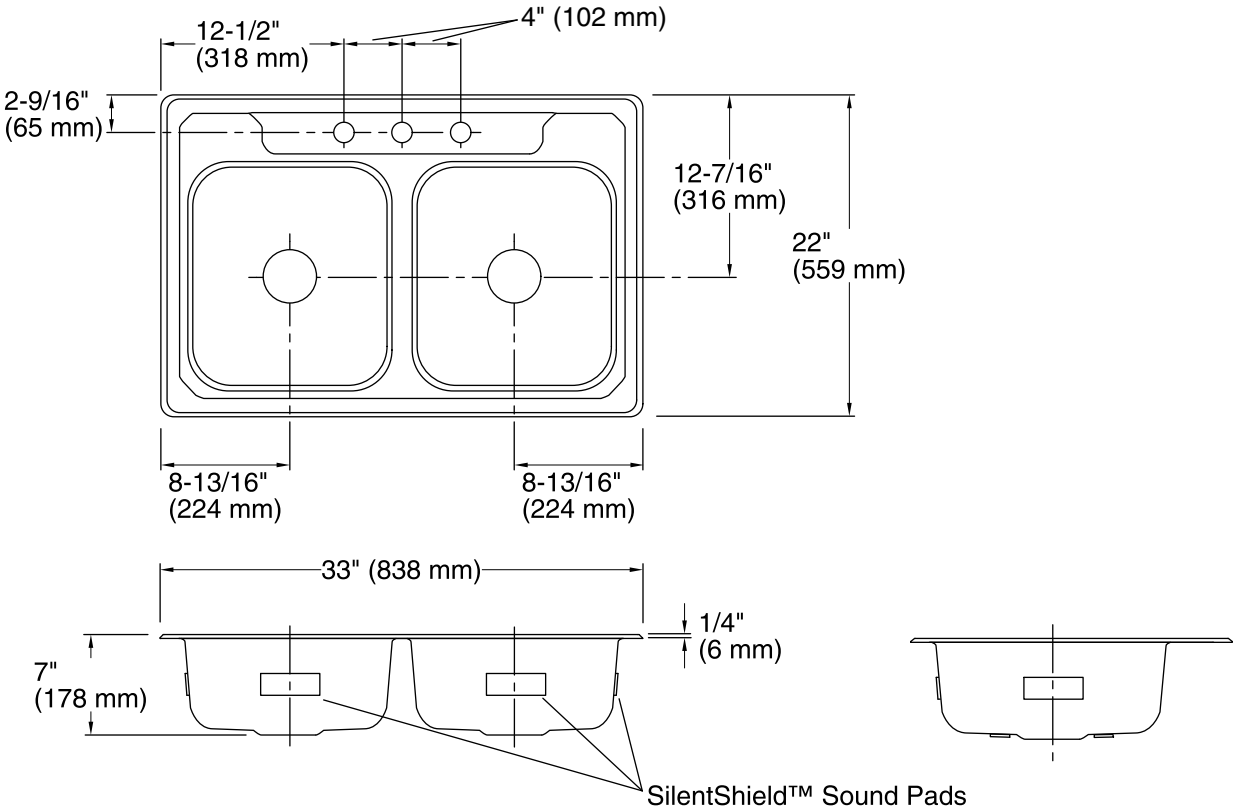

Technical Information

All product dimensions are nominal.

Bowl configuration:	Double equal
Installation:	Top-mount
Cutout:	Top-mount, 32-1/2" x 21-1/2" (826 mm x 546 mm) with 1/2" (13 mm) radius corners
Min. base cabinet width:	36" (914 mm)
Bowl area (Left):	Length: 14" (356 mm) Width: 15-1/8" (384 mm) Bowl depth: 7" (178 mm) Water depth: 7" (178 mm)
Bowl area (Right):	Length: 14" (356 mm) Width: 15-1/8" (384 mm) Bowl depth: 7" (178 mm) Water depth: 7" (178 mm)
Number of deck holes:	3
Faucet hole(s):	1-7/16" (37 mm)
Drain hole:	3-5/8" (92 mm)

Notes

Install this product according to the installation instructions.

Measure your actual product for roughing-in details.