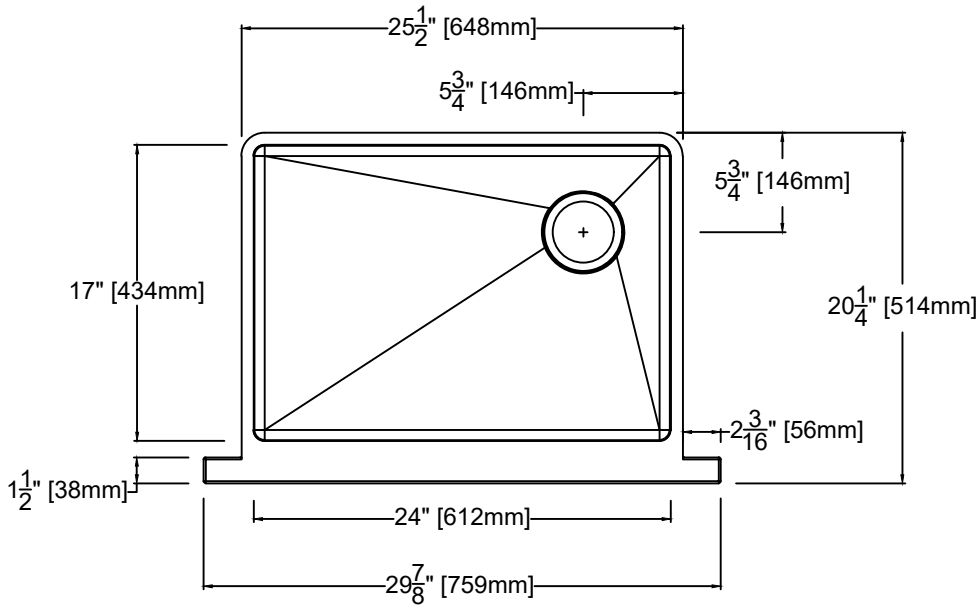

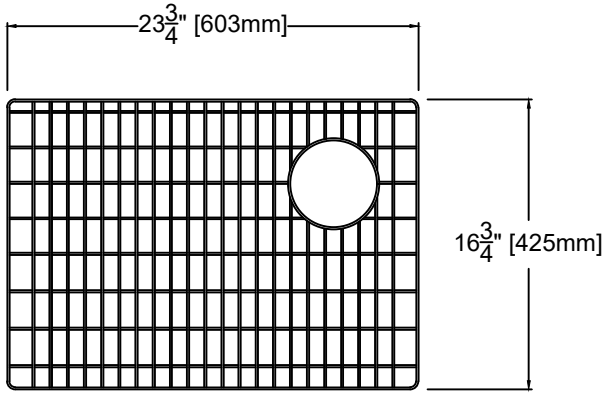

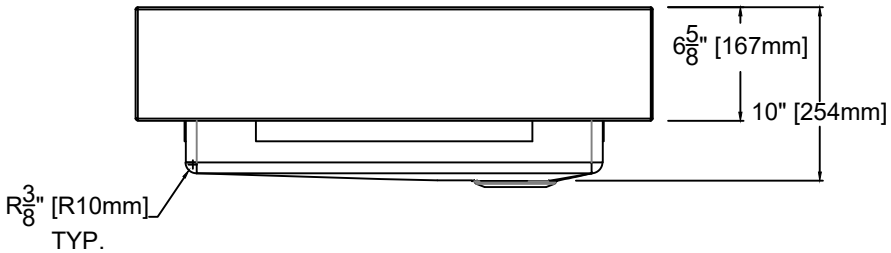

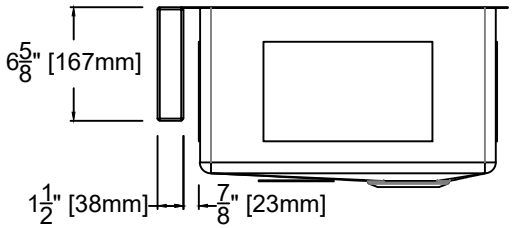

TRANSOLID DIAMOND LITE
LUSBF302010
2/23/17
REV. 3/8/17