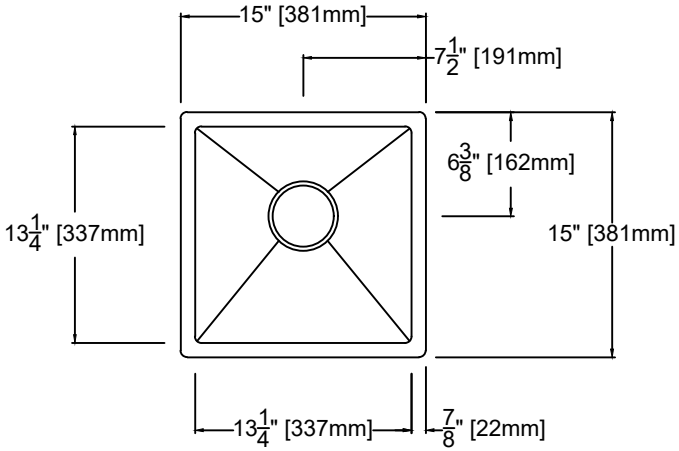

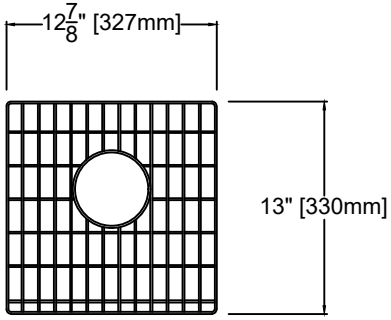

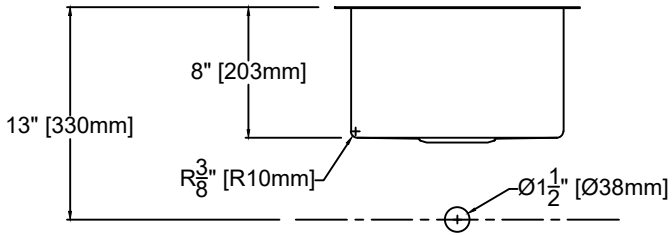

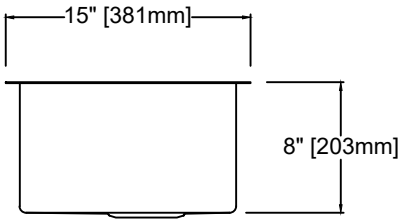

TRANSOLID MERIDIAN
MUSB15158
2/24/17