transolid®
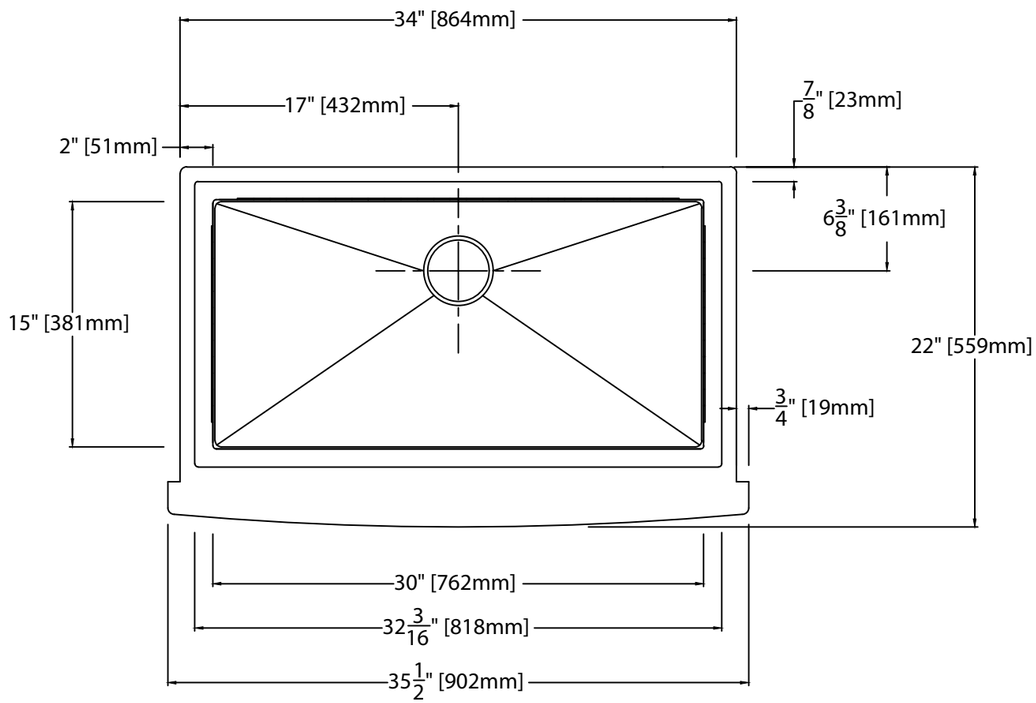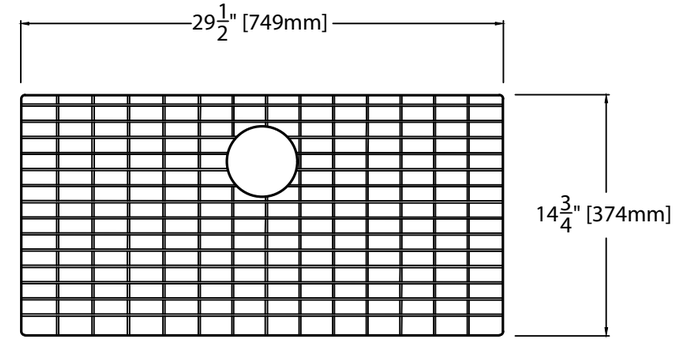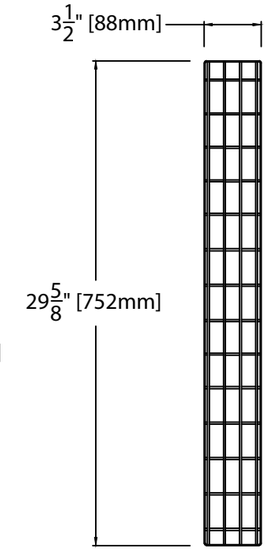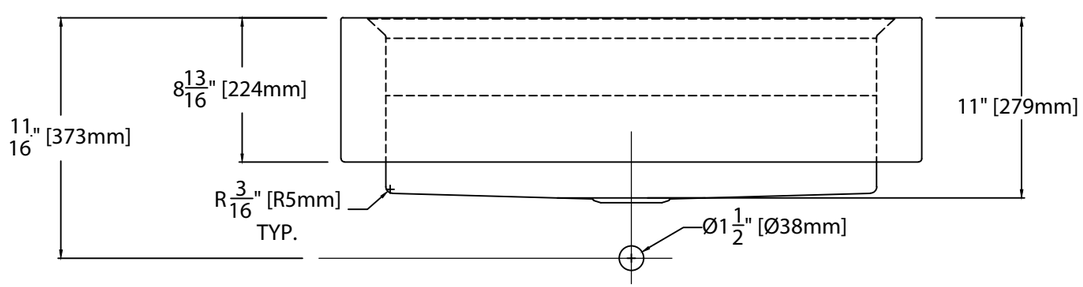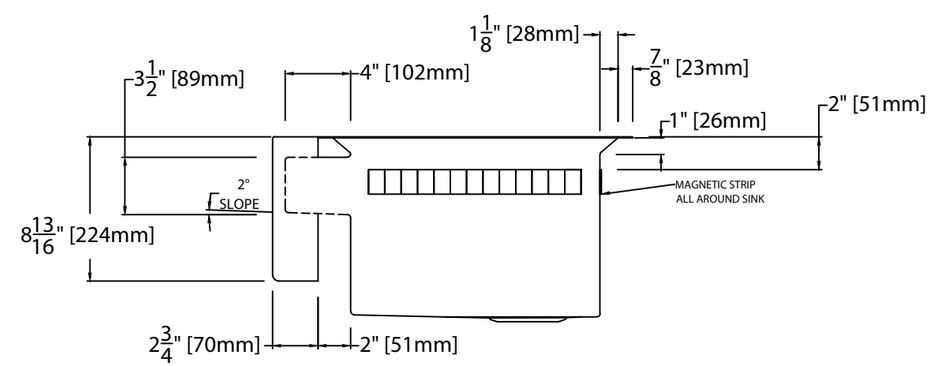
Model No.:
PUSSF362211