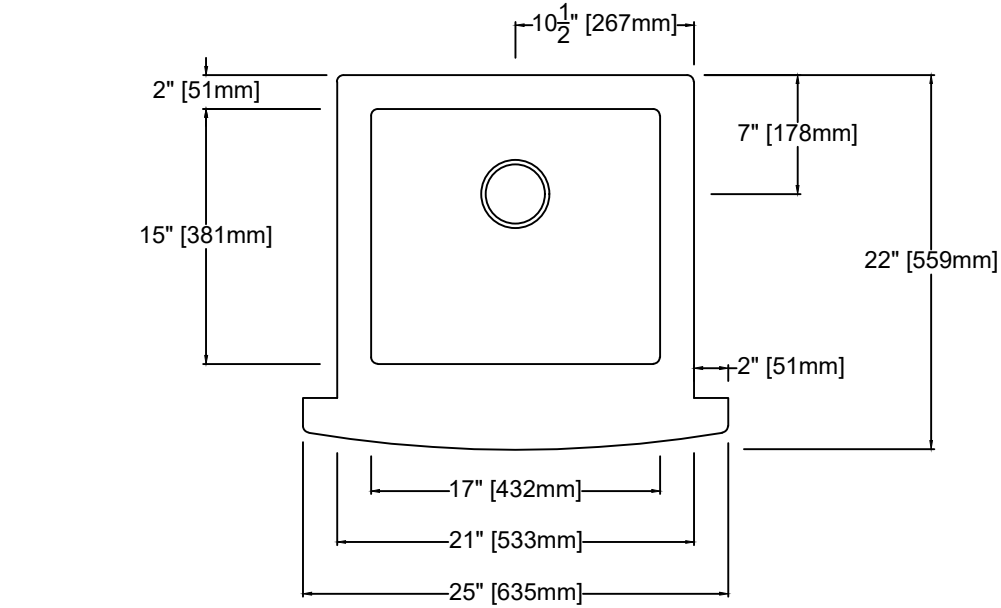

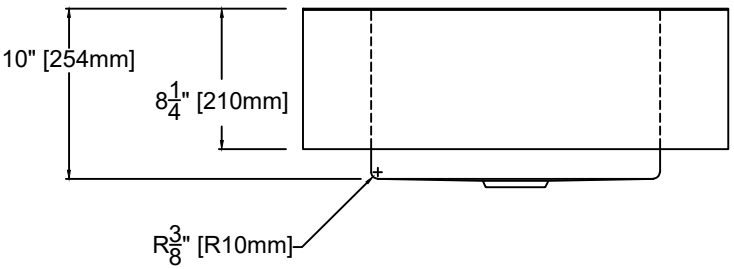

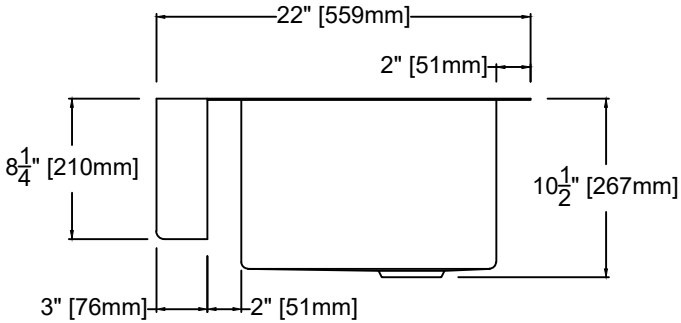

TRANSOLID
WUSBF252210
3/2/17